Aqua Pat Bubble Air Massage Bath Tub T106 - Dimensional Drawing

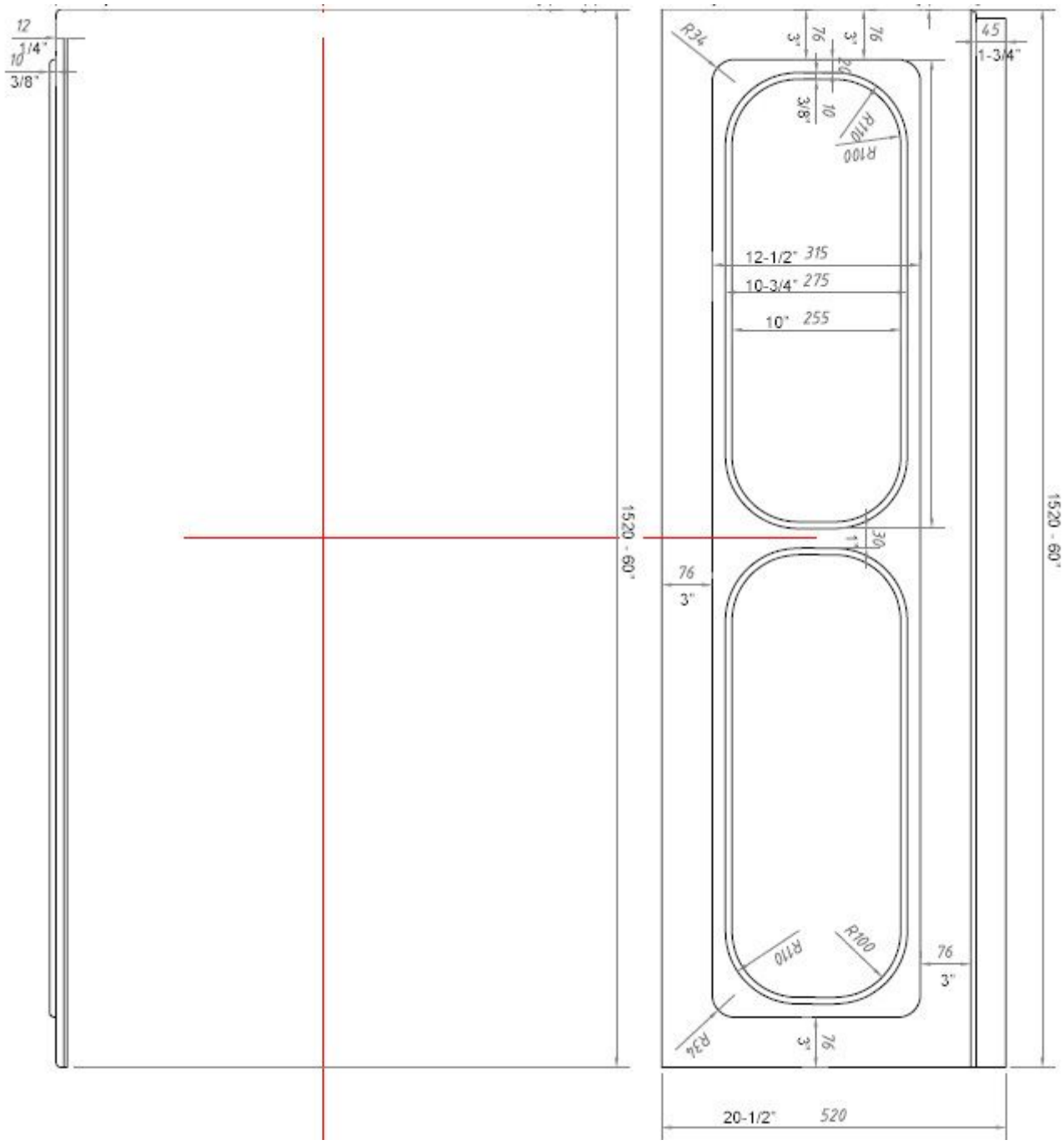

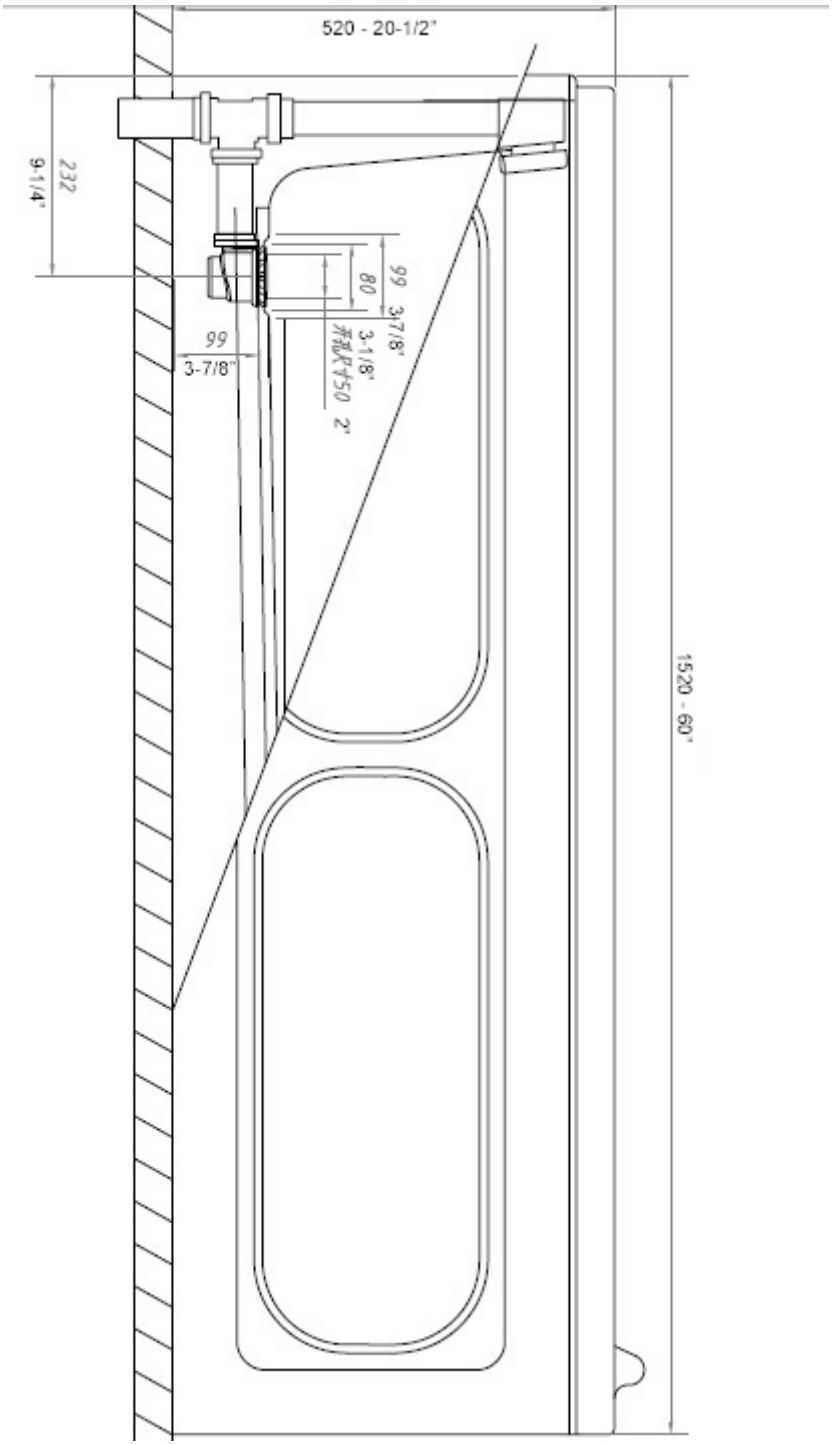
520 - 20-1/2"
1520 - 60"
232
9-1/4"
99
3-7/8"
80
3-1/8"
450
2"
99
3-7/8"

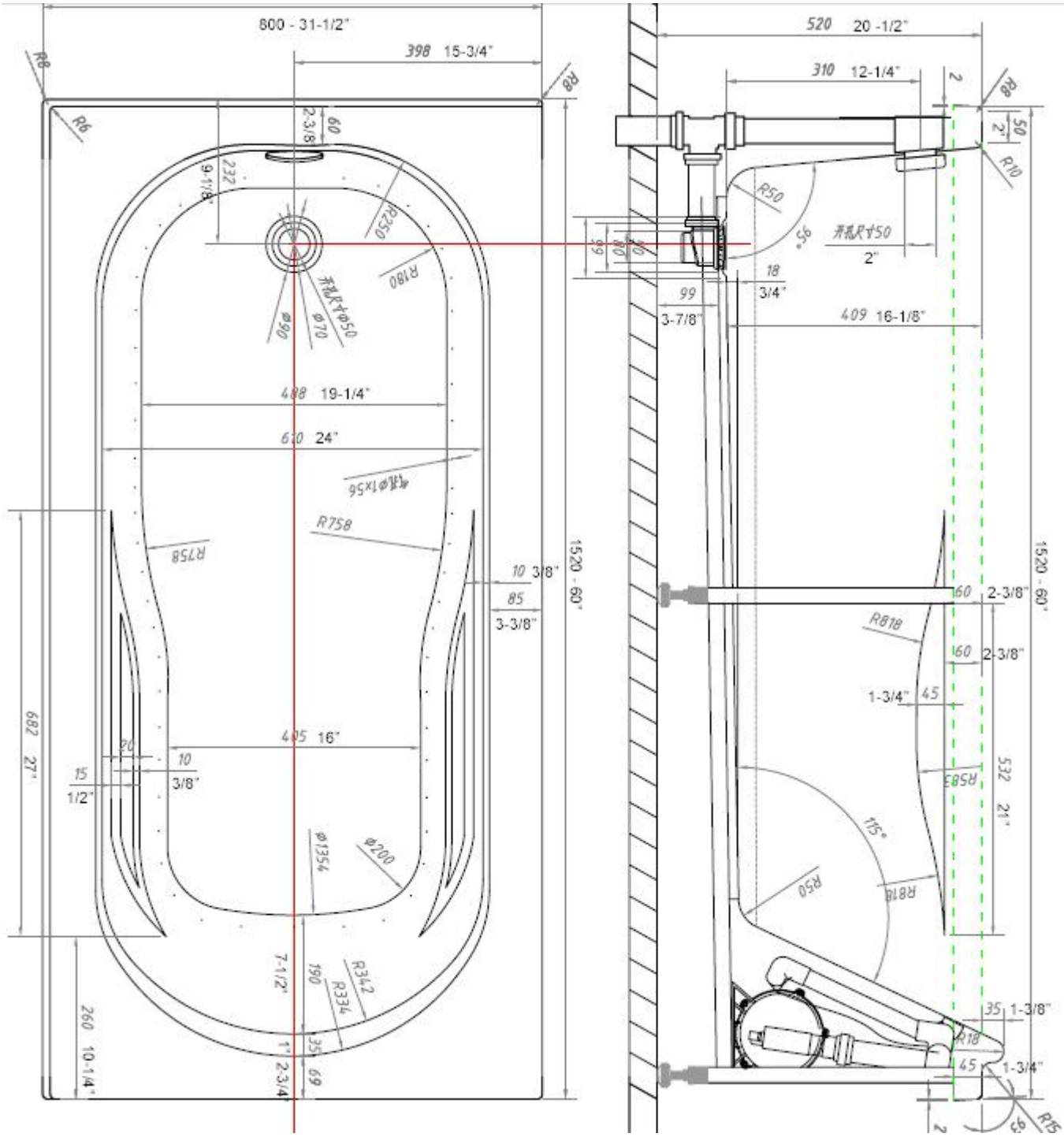
800 - 31-1/2"
398 15-3/4"
R8
R6
60
2-3/8"
232
9-1/8"
R250
R180
开孔尺寸50
Ø70
Ø90
488 19-1/4"
610 24"
R758
R758
10 3/8"
85
3-3/8"
1520 - 60"
682 27"
20
405 16"
10
3/8"
15
1/2"
Ø1354
Ø200
7-1/2"
190
R342
R334
260 10-1/4"
35
1"
2-3/4"
69
520 20 -1/2"
310 12-1/4"
2
50
2"
R10
R50
95°
开孔尺寸50
2"
18
3/4"
99
3-7/8"
409 16-1/8"
60 2-3/8"
R818
60 2-3/8"
1-3/4"
45
532 21"
R583
115°
R50
R818
35 1-3/8"
R18
45 1-3/4"
R15

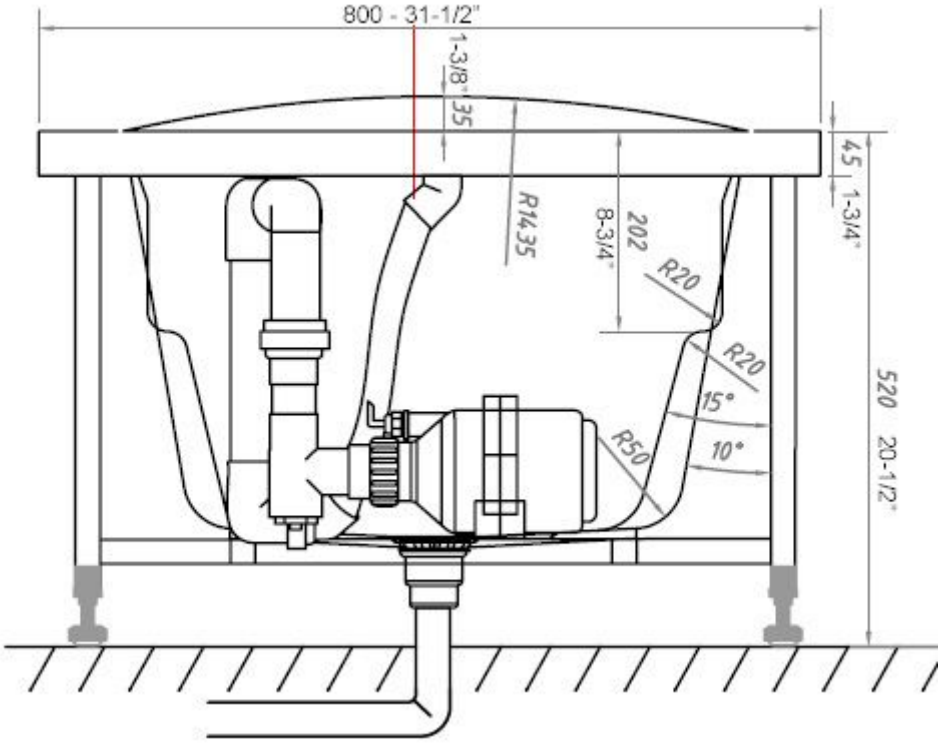

For additional information contact AquaPat at 877 789 AQUA (2782) or visit our website at www.aquapat.com or www.masterfaucet.com