# Aquatower

## 27 016 1000 Shower System

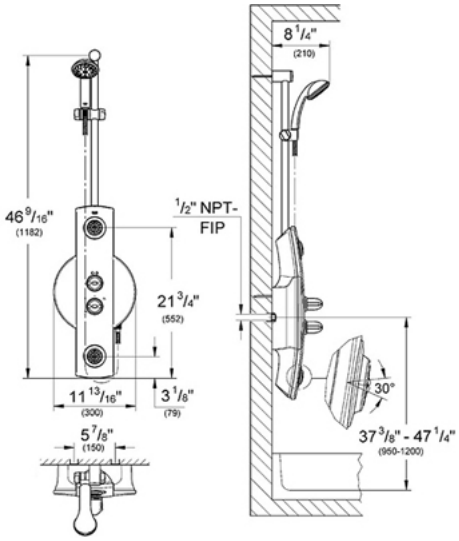


## Description

Complete shower system includes:
Thermostat valve
Tempesta Trio hand shower (28 421) and hose
Hand shower features: Rain, Massage, and Jet sprays.
Adjustable height shower bar
Two swivel body sprays with 12 spray nozzles each with 30º swivel joint
GROHE DreamSpray® Technology
Speedclean anti-lime system
With built-in volume control and transfer valve
Easy installation or retrofit:
Attaches to a wall at two fixing points
Hot/Cold water supply connections

## Flow Rate

Per shower outlet: 2.5 gpm at 80 psi

## Code Compliance

ASME/ANSI A112.18.1M
ASSE Standard 1016

## Finish Options

27 016 OOO Starlight® Chrome

**GROHE America, Inc 241 Covington Drive, Bloomingdale, IL 60108 630-582-7711 Fax:630-582-7722**
**GROHE Canada, Inc 1226 Lakeshore Road East, Mississauga, Ontario Canada L5E 1E9 905.271.2929 Fax:905.271.9494**